Aunthentic Repaint

By Mario Solorzano

CITYCRAFT™

PAPERMODELS

Lufthansa



AIRBUS A320-214

Lufthansa (Star Alliance Livery) Airbus A320 157

Deutsche Lufthansa AG (German pronunciation: [ˌdɔʏtʃə ˈlʊfthanzaː ʔaːˈgeː]), or simply Lufthansa, is the flag carrier of Germany. When combined with its subsidiaries, it ranks second in Europe by passengers carried, as well as largest in Europe and fourth largest in the world by revenue. Lufthansa is also one of the five founding members of Star Alliance, which is the world's largest airline alliance, formed in 1997. Lufthansa was founded in 1953 and commenced operations in April 1955.

Besides operating flights under its own brand, the Lufthansa Group also owns several other airlines, including Austrian Airlines, Brussels Airlines, Discover Airlines, Eurowings and Swiss International Air Lines.

The Airbus A320 family is a series of narrow-body airliners developed and produced by Airbus. The A320 was launched in March 1984, first flew on 22 February 1987, and was introduced in April 1988 by Air France. The first member of the family was followed by the stretched A321 (first delivered in January 1994), the shorter A319 (April 1996), and the even shorter A318 (July 2003).

The A320 series has two variants, the A320-100 and A320-200. Only 21 A320-100s were produced. These aircraft, the first to be manufactured, were delivered to Air Inter – later acquired by Air France – and British Airways as a result of an order from British Caledonian made prior to its acquisition. The primary differences from the -100 were the -200's wingtip fences and increased fuel capacity, providing increased range.





Scale: 1:100
Length: (375mm)
Width: (358mm)
Parts: 319 (12 pages)

This model has been designed in 2 styles.
On the ground (with wheels)
In Flight style (without wheels)
Is nesessary assemble the stand for the "in flight style*

*This model is Designed for Papercraft and is different in several ways from the Real Life Plane.
*Build the model by carefully watching the Assembly Instructions Video.
*Make sure you have the correct printer settings before printing.
It is recommended to use Adobe Acrobat Reader to print models at 100% scale option.

© 2024 CityCraft

Airbus A320-214 | Lufthansa (Star Alliance Livery) D-AIZH

CITYCRAFT™ PAPERMODELS

Aunthentic Repaint

By Mario Solorzano

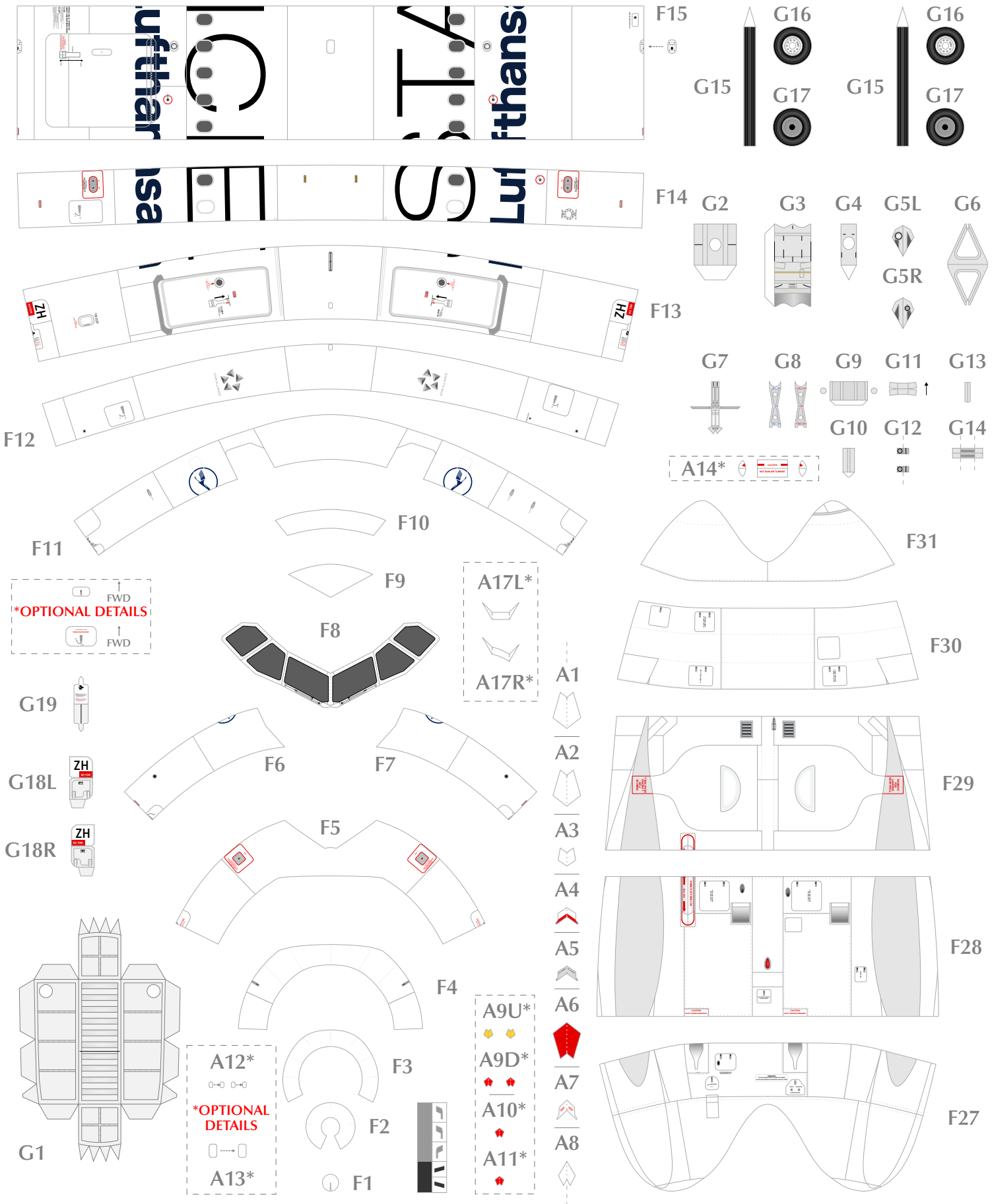

© 2024 CityCraft

Scale 1:100

Airbus A320-214 | Lufthansa (Star Alliance Livery) D-AIZH

CITYCRAFT™ PAPERMODELS

Aunthentic Repaint

By Mario Solorzano

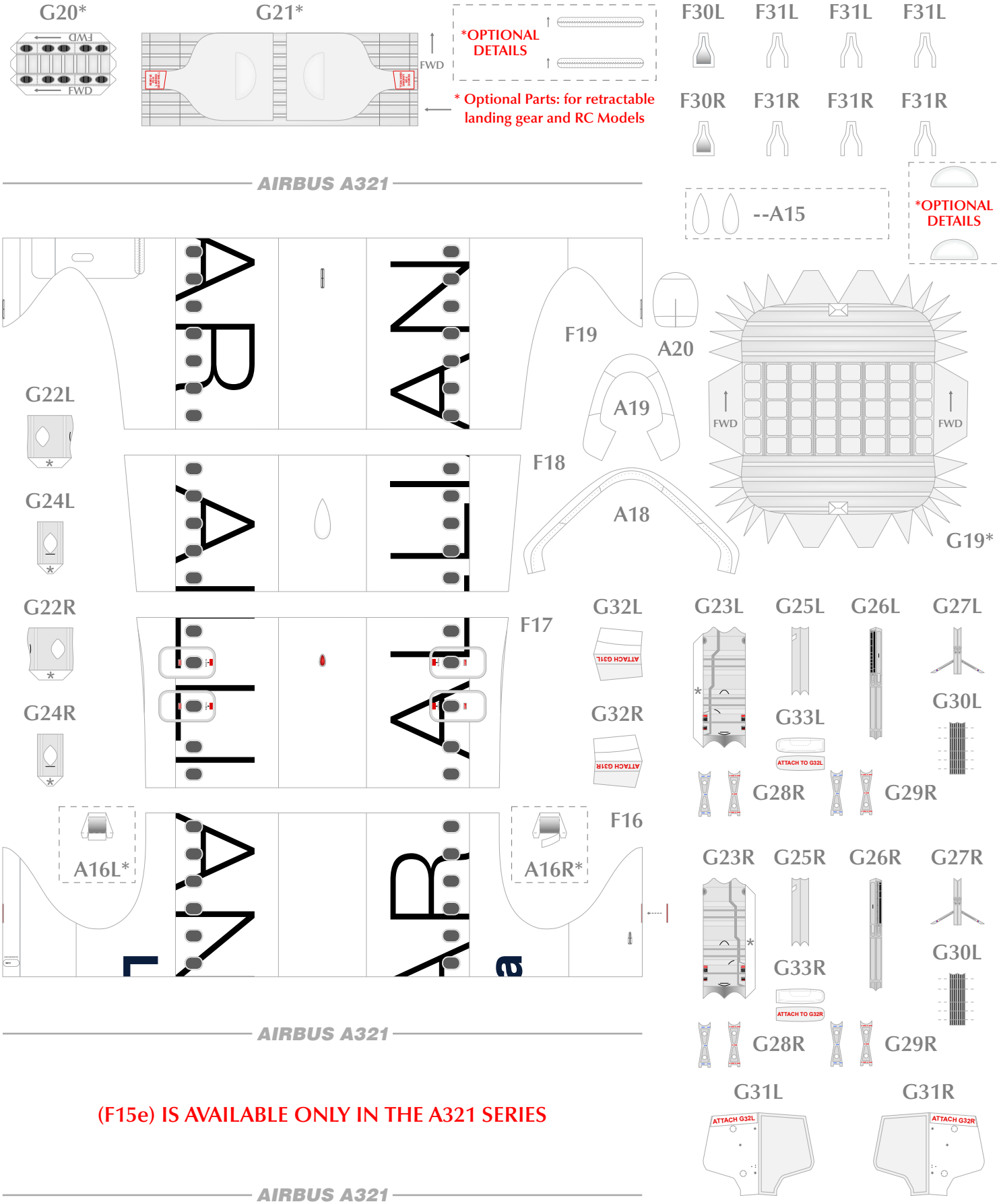

© 2024 CityCraft

Scale 1:100

Airbus A320-214 | Lufthansa (Star Alliance Livery) D-AIZH

CITYCRAFT™ PAPERMODELS

Aunthentic Repaint

By Mario Solorzano

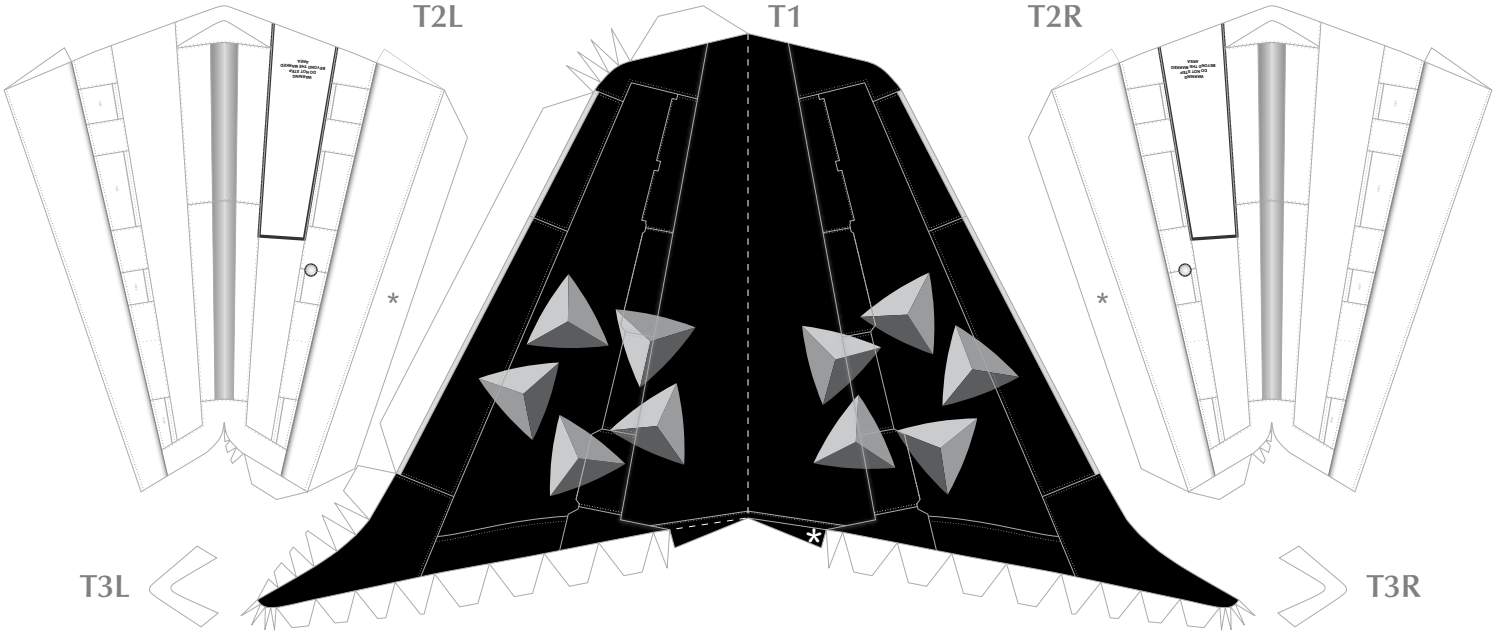

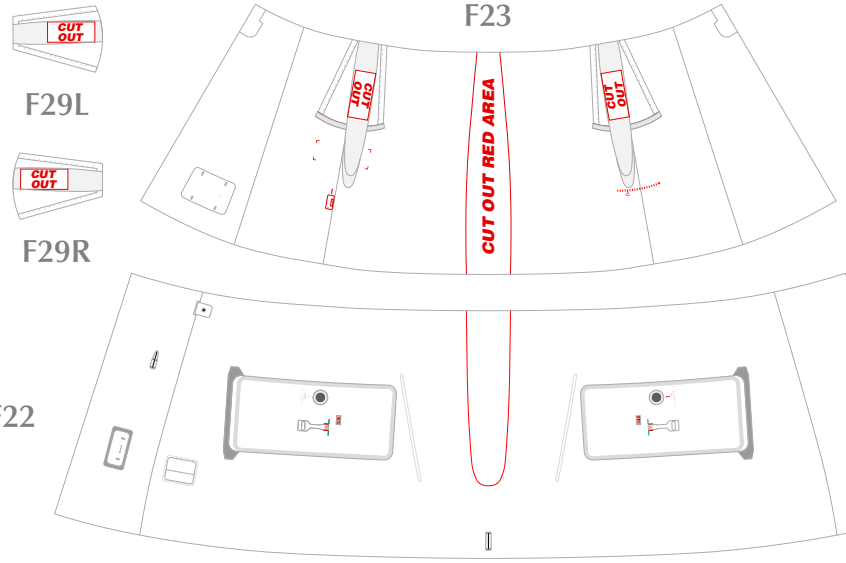

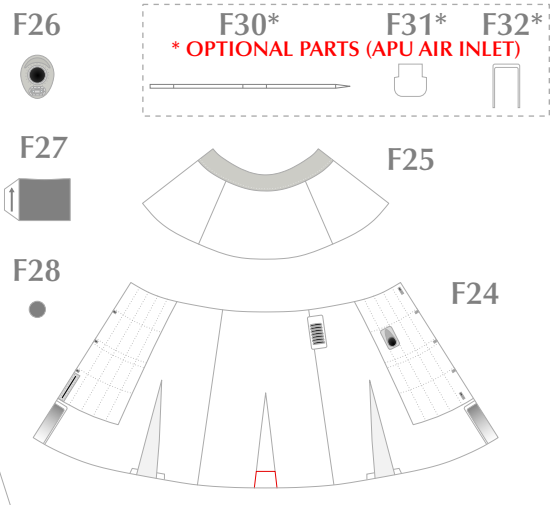

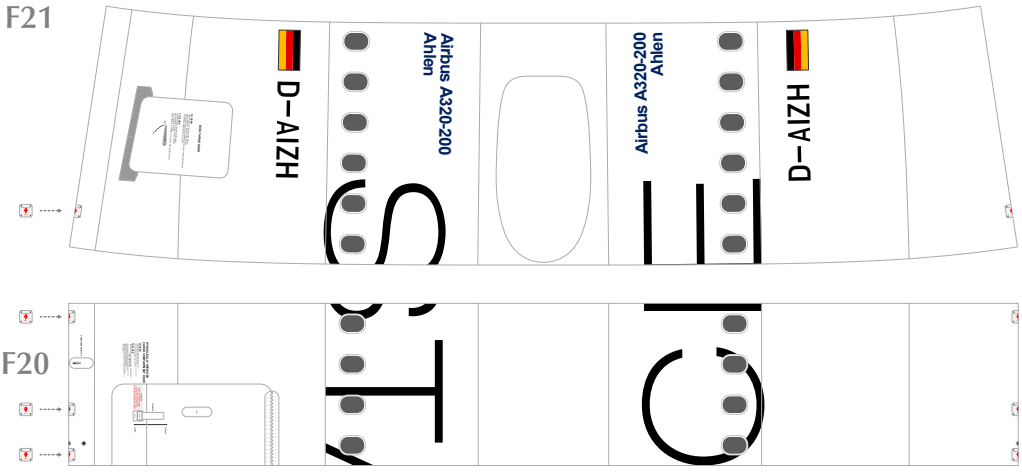

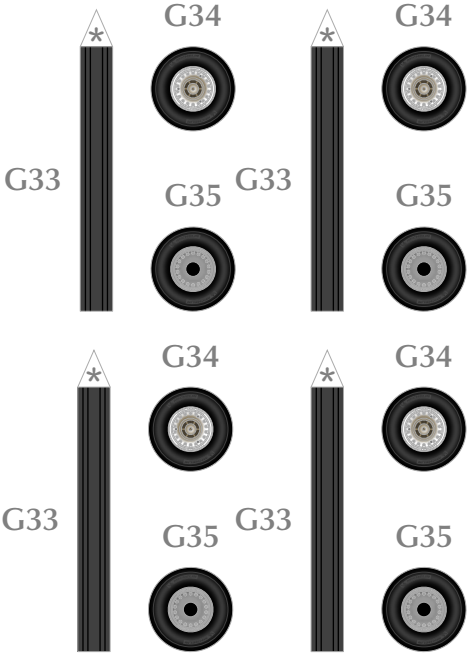

AIRBUS A321

© 2024 CityCraft

Scale 1:100

Airbus A320-214 | Lufthansa (Star Alliance Livery) D-AIZH

CITYCRAFT™ PAPERMODELS

Aunthentic Repaint

Engines: CFM56-5B

By Mario Solorzano

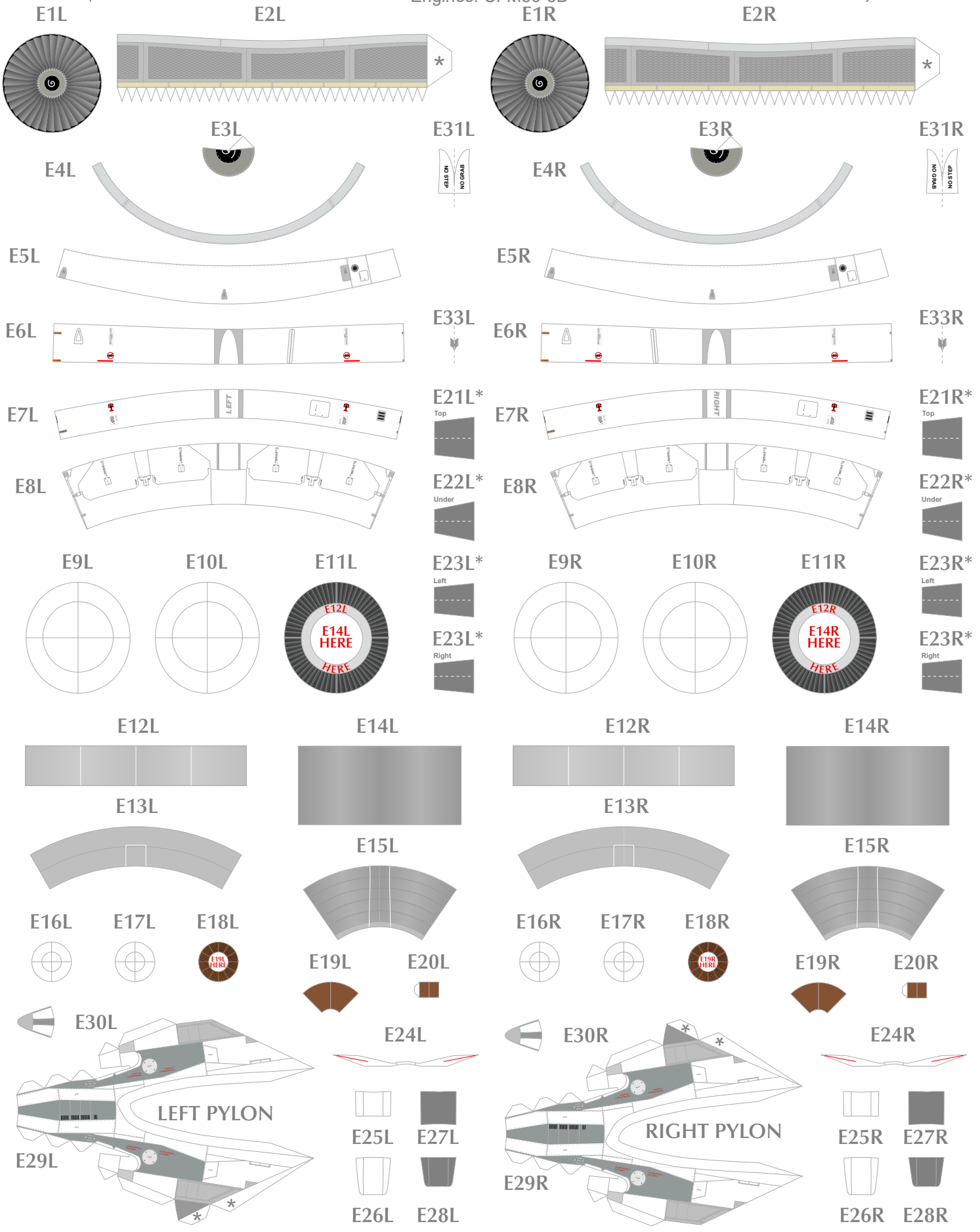

© 2024 CityCraft

Scale 1:100

Airbus A320-214 | Lufthansa (Star Alliance Livery) D-AIZH

CITYCRAFT™ PAPERMODELS

Aunthentic Repaint

By Mario Solorzano

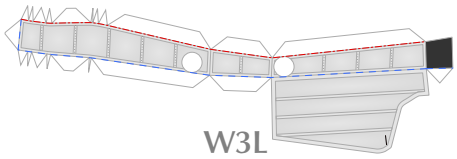

W3L



W4L

*OPTIONAL DETAILS

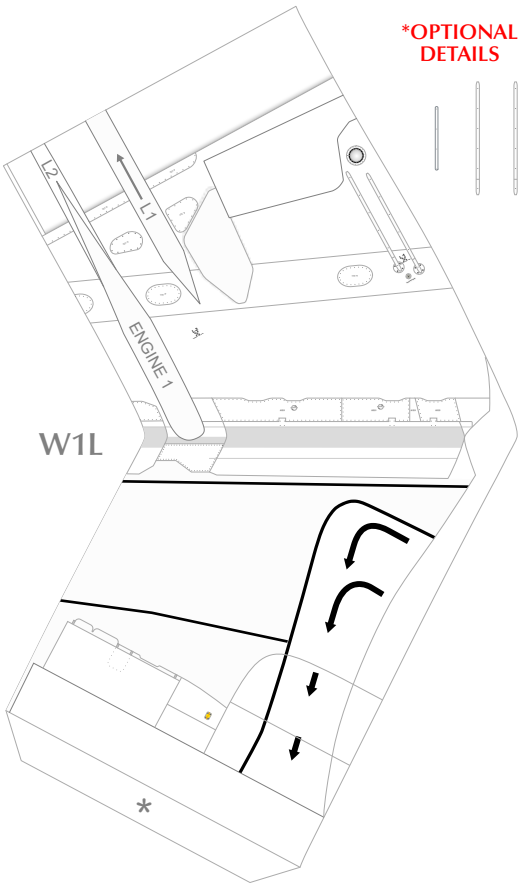

W1L

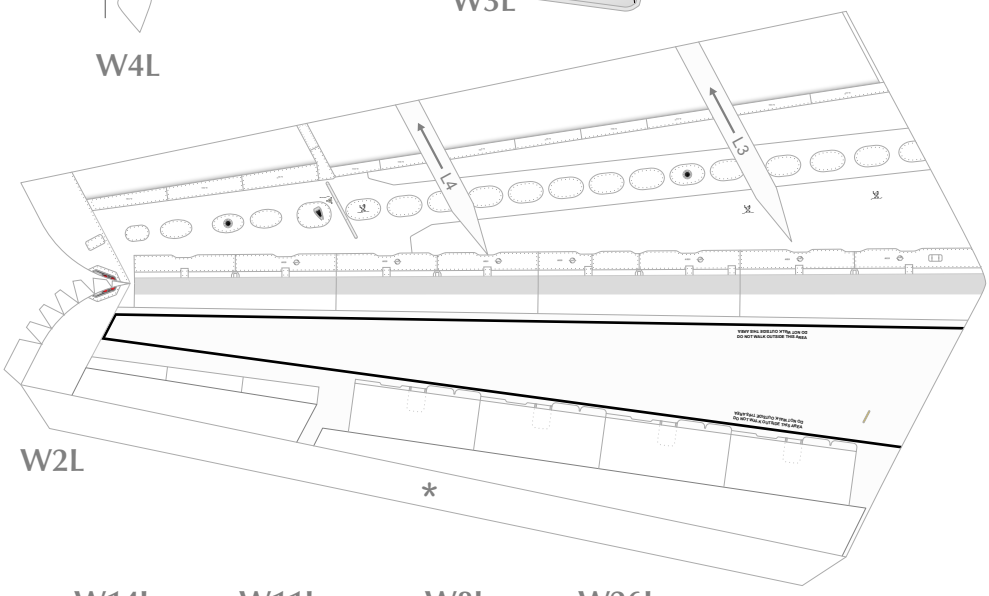

W2L

W14L



W11L



W8L



W26L



W13L

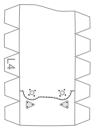

W10L

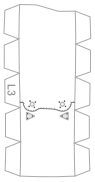

W7L

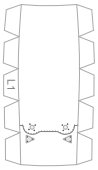

W27L

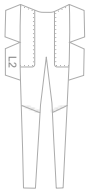

W12L



W9L



W6L



W25L

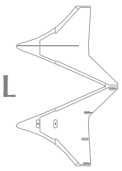

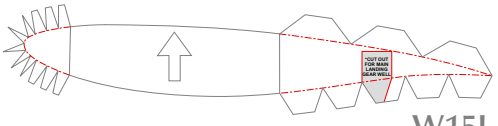

W15L

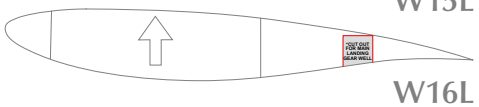

W16L

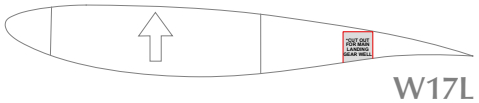

W17L

W18L

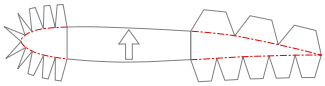

W19L



W20L

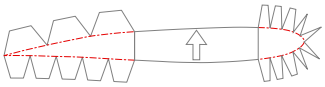

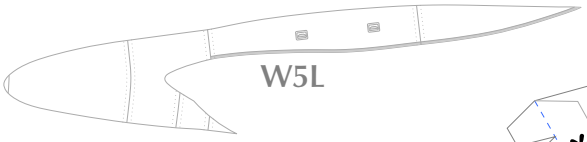

W5L



W22L

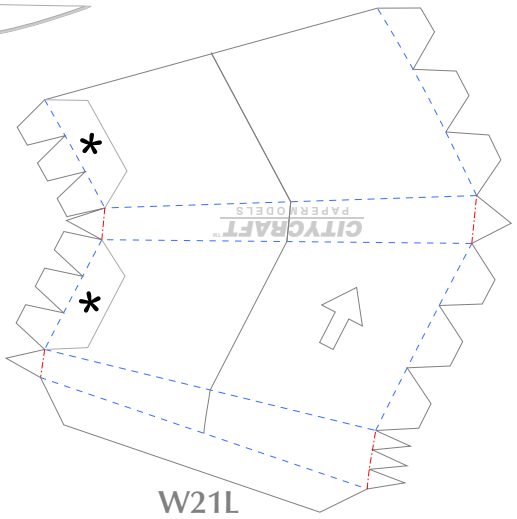

W21L

© 2024 CityCraft

Scale 1:100

Airbus A320-214 | Lufthansa (Star Alliance Livery) D-AIZH

CITYCRAFT™ PAPERMODELS

Aunthentic Repaint

By Mario Solorzano

*OPTIONAL DETAILS

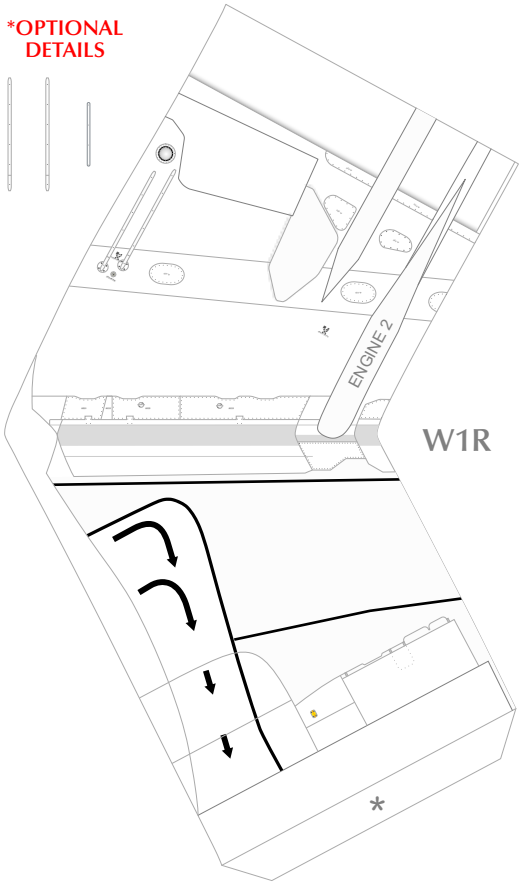

W1R

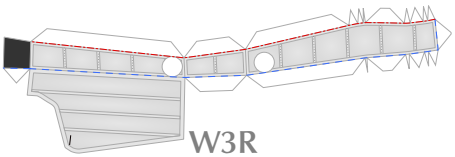

W3R



W4R

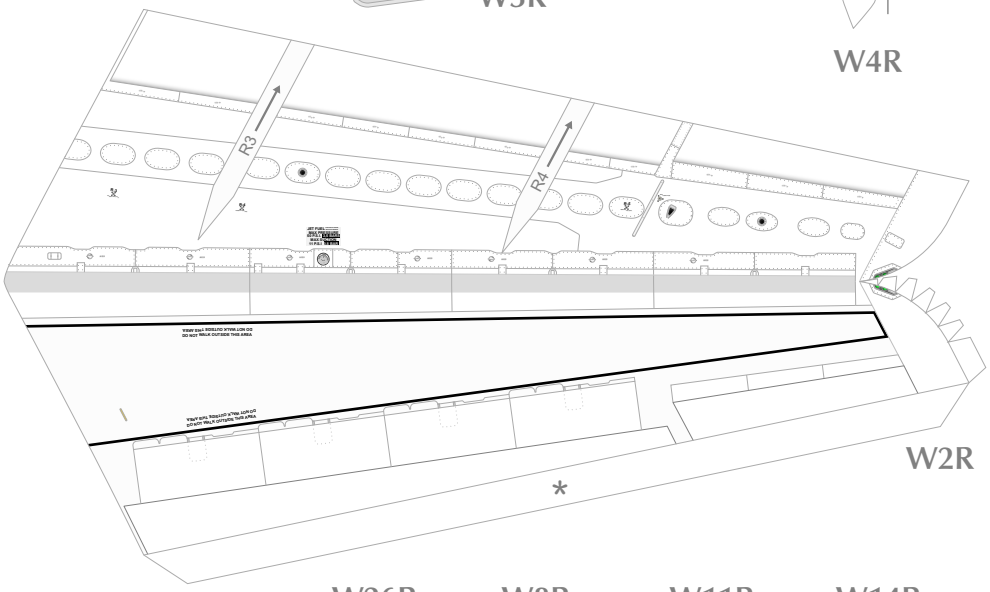

W2R



W26R



W8R



W11R



W14R

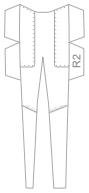

W27R

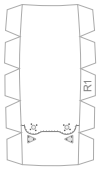

W7R

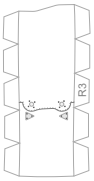

W10R

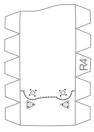

W13L

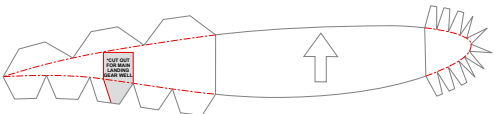

W15R

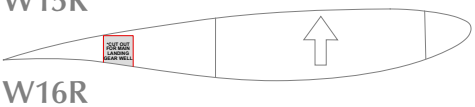

W16R

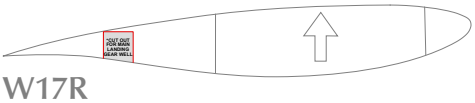

W17R



W25L



W6R



W9R



W12R

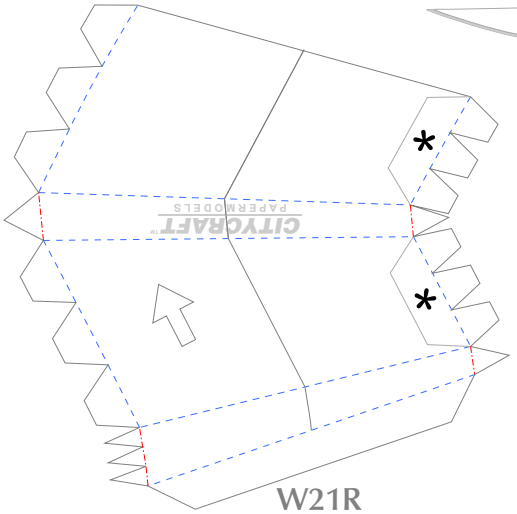

W21R



W5R

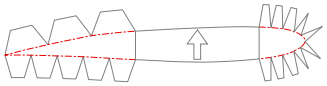

W18R



W19R

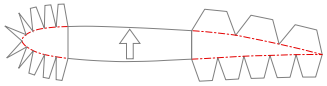

W20R

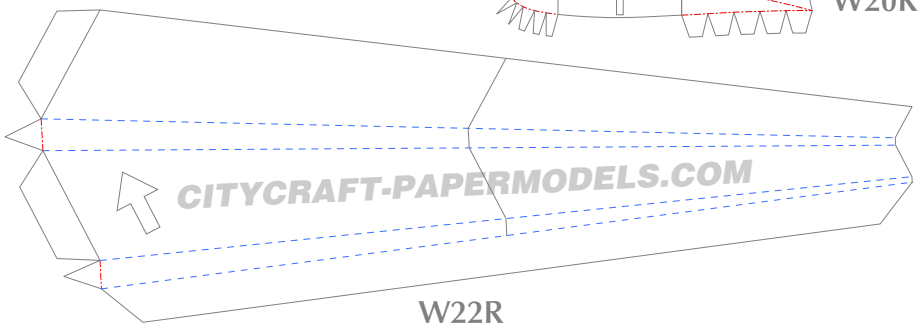

W22R

© 2024 CityCraft

Scale 1:100

Airbus A320-214 | Lufthansa (Star Alliance Livery) D-AIZH

CITYCRAFT™ PAPERMODELS

Aunthentic Repaint

By Mario Solorzano

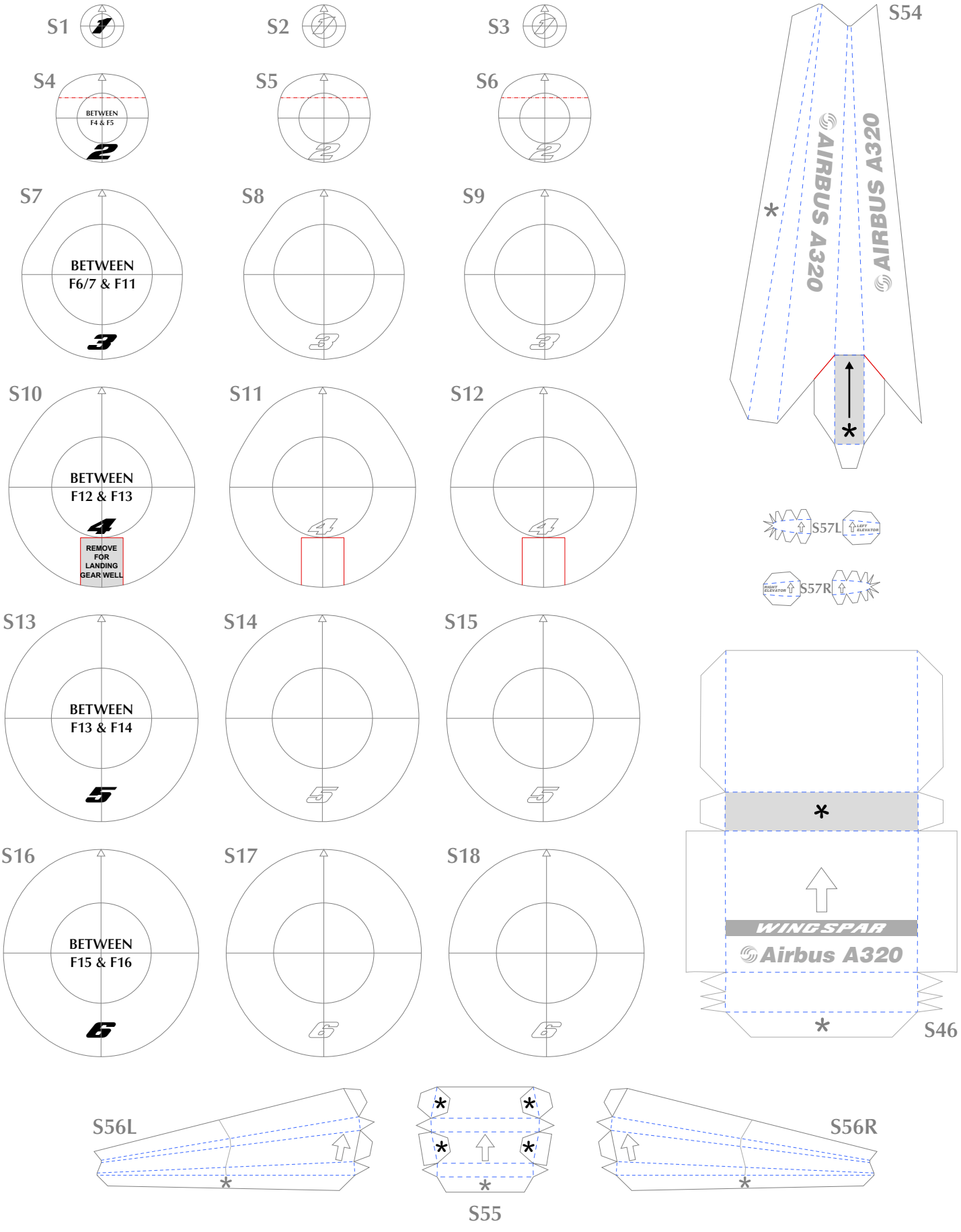

© 2024 CityCraft

Scale 1:100

Airbus A320-214 | Lufthansa (Star Alliance Livery) D-AIZH

CITYCRAFT™ PAPERMODELS

Aunthentic Repaint

By Mario Solorzano

S19

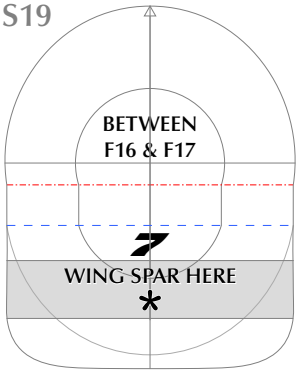

S20

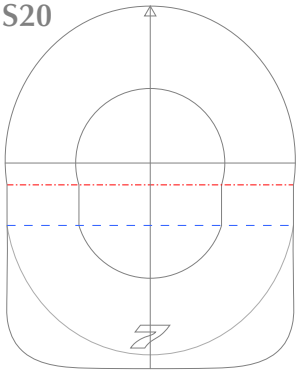

S21

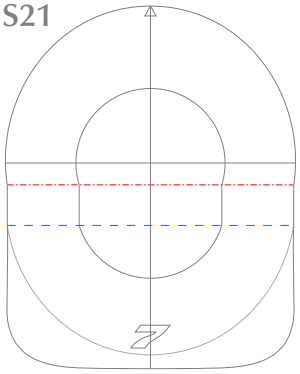

S22

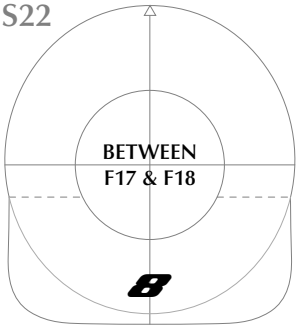

S23

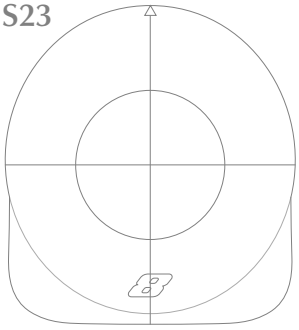

S24

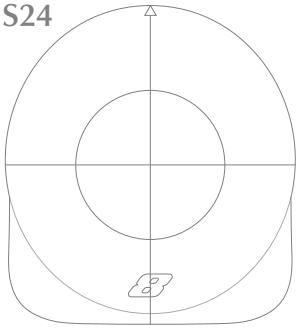

S25

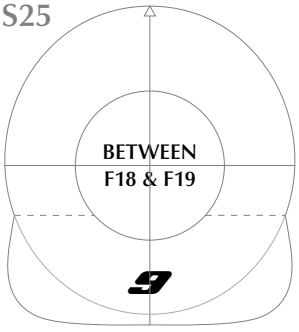

S26

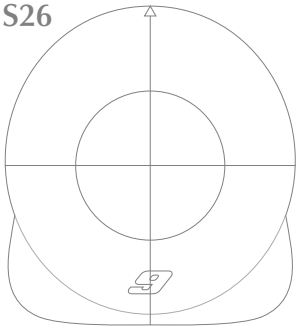

S27

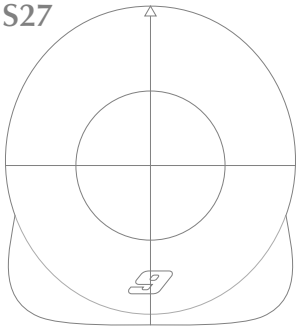

S28

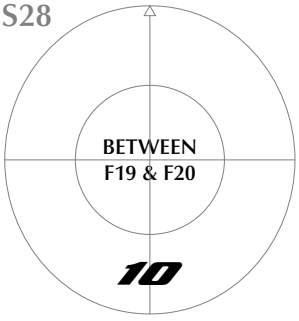

S29

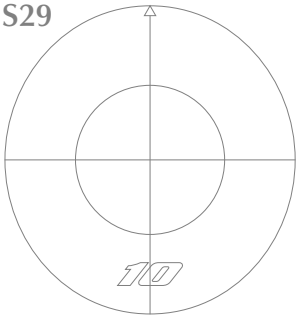

S30

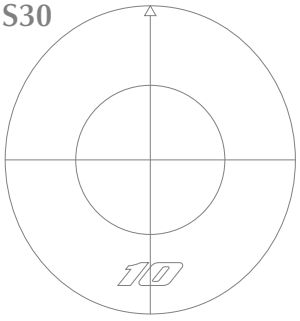

S31

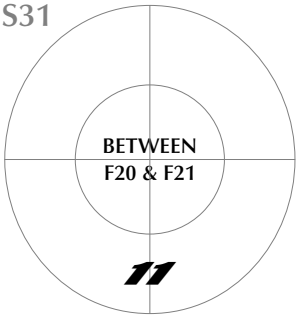

S32

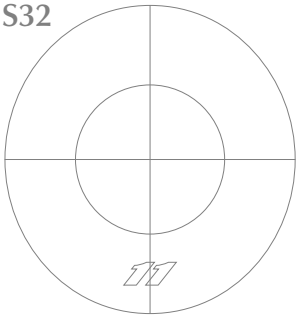

S33

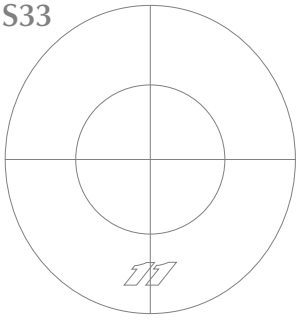

S37

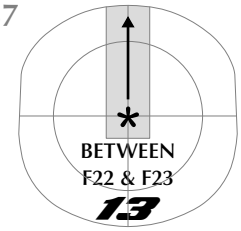

S40



S38

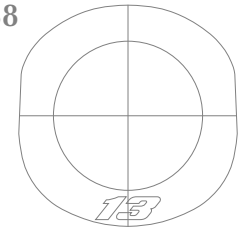

S41

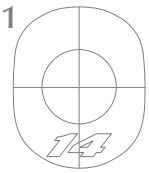

S39

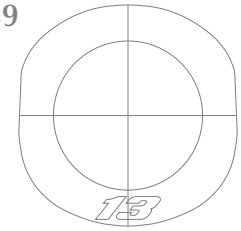

S42



S34

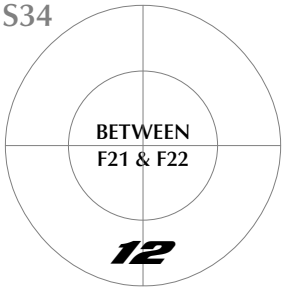

S43



S44



S35

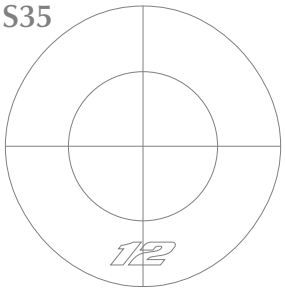

S45



S36



© 2024 CityCraft

Scale 1:100

B1

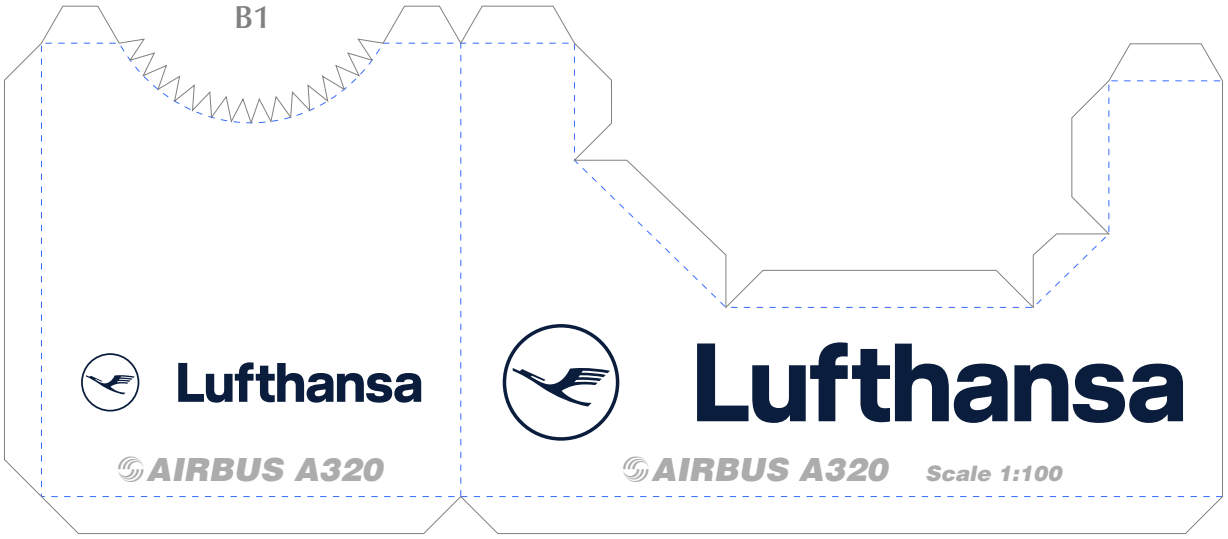

B2

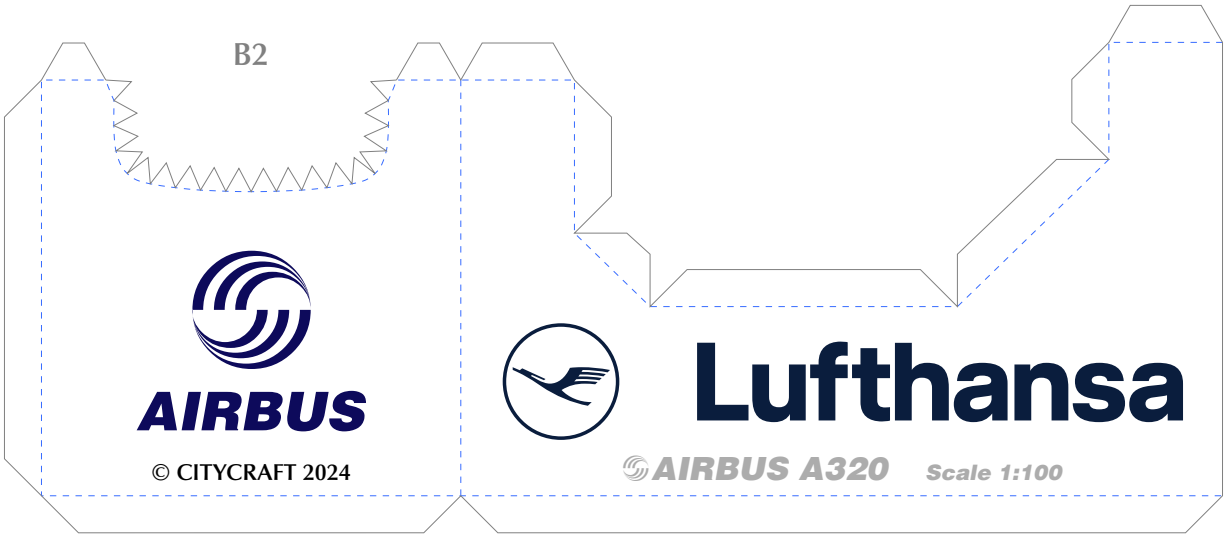

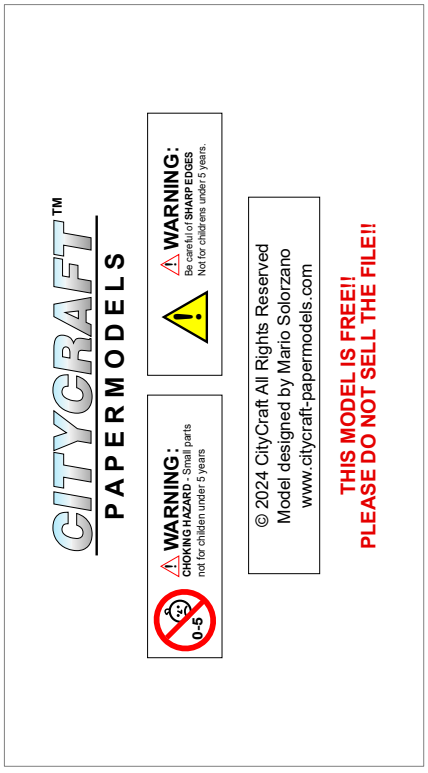

B6

B3



B4



B5

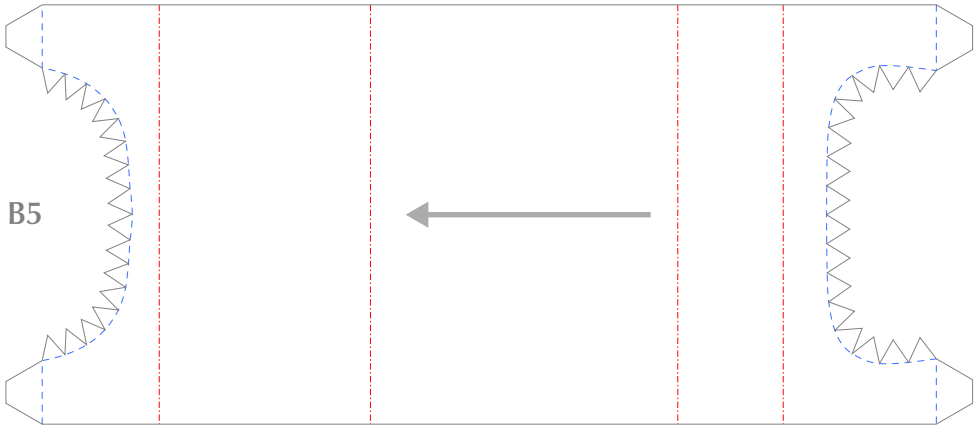

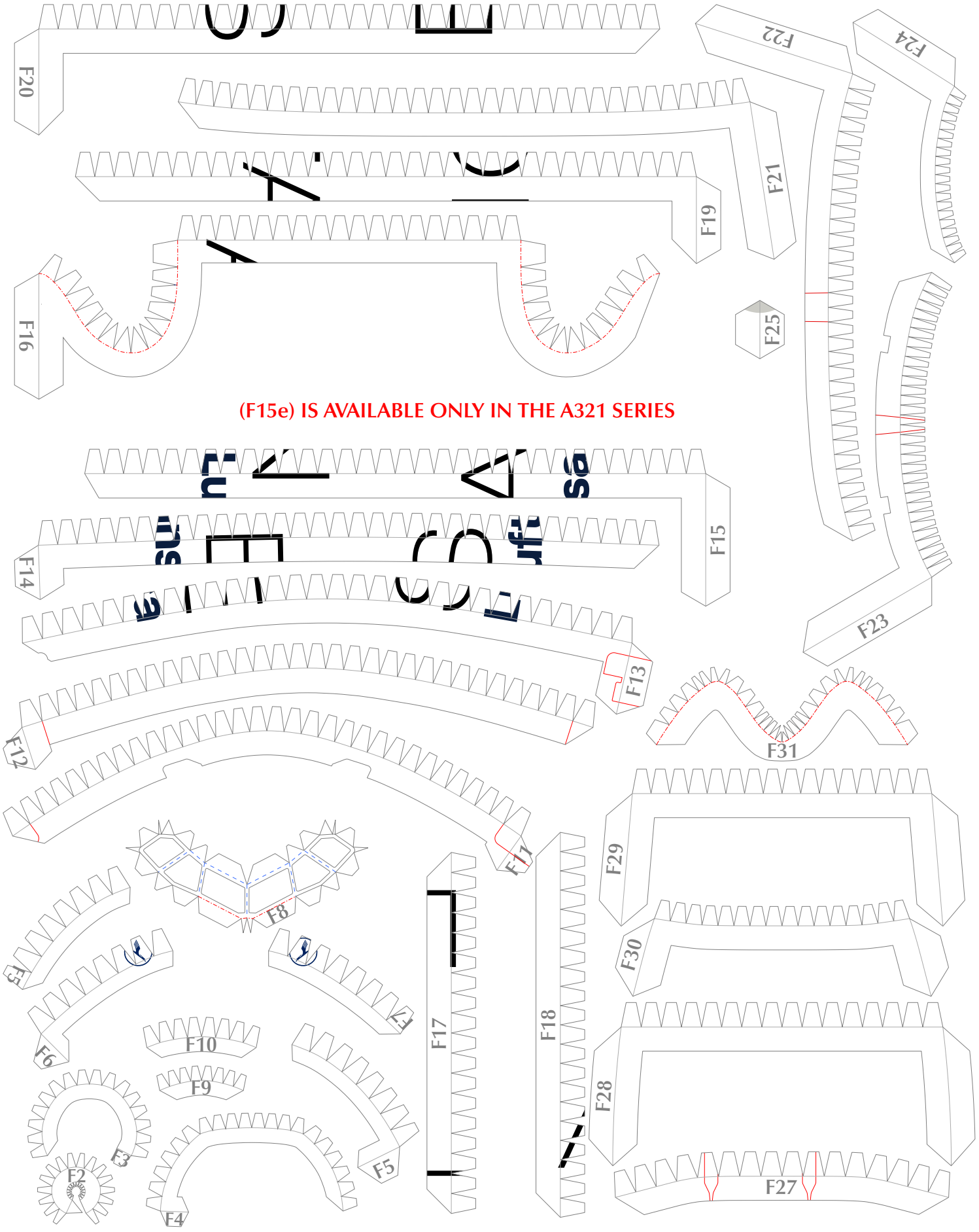

© 2024 CityCraft

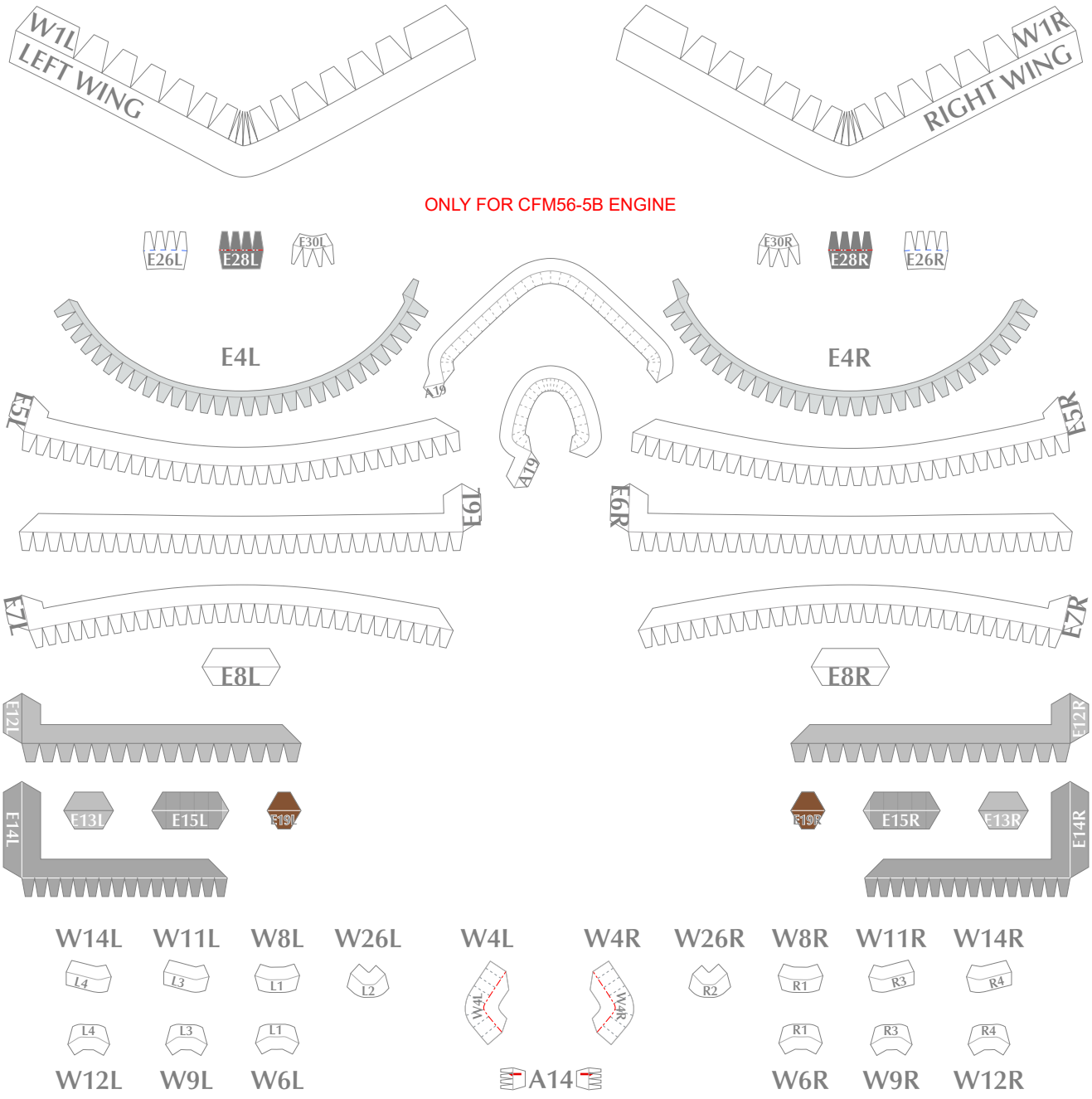
W1L
LEFT WING
W1R
RIGHT WING
ONLY FOR CFM56-5B ENGINE
E26L
E28L
E30L
E30R
E28R
E26R
E4L
E4R
A19
E5L
E5R
E6L
E6R
E7L
E7R
E8L
E8R
E12L
E12R
E14L
E14R
E13L
E15L
E19L
E19R
E15R
E13R
W14L
W11L
W8L
W26L
W4L
W4R
W26R
W8R
W11R
W14R
L4
L3
L1
L2
W4L
W4R
R2
R1
R3
R4
W12L
W9L
W6L
A14
W6R
W9R
W12R